# 390 SF Covered Porch Addition

## Savannah, Georgia

A real residential permit-drawing project documenting a new 30 x 13 ft wood-framed lean-to covered porch at an existing two-story residence. The design coordinated site placement, roof framing, structural connections, wind/uplift detailing, and Georgia professional engineering review.

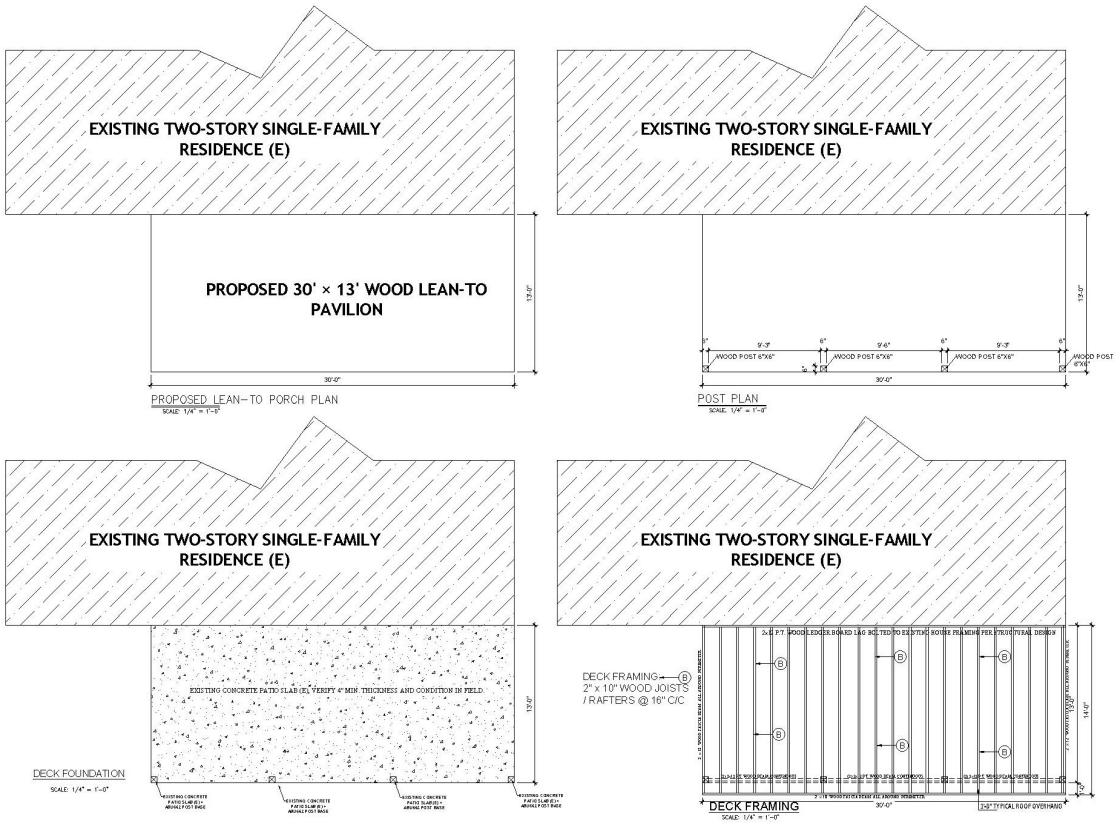


Original anonymized project drawing excerpt. Professional identifiers intentionally excluded.

# What the project needed to solve

The porch had to connect to an existing two-story residence while documenting a continuous structural load path. The available project record identified support on existing patio concrete, roof-to-house coordination, post and beam framing, and wind/uplift connection requirements.

## Verified drawing scope

- Property site plan locating the proposed 390 SF porch.
- Structural and roof framing plans.
- Exterior elevations and building sections.
- 6x6 wood posts and built-up beam coordination.
- 2x10 rafters at 16 inches on center.
- Ledger attachment to the existing residence.
- 3:12 mono-slope roof with sheathing, flashing and weatherproofing notes.
- Post-base and connector details for load-path documentation.

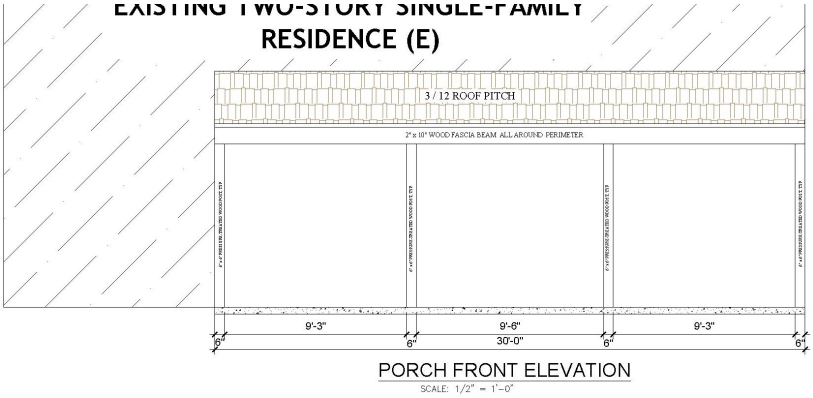


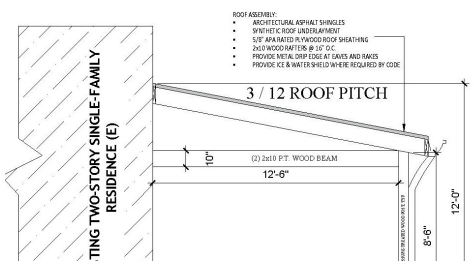


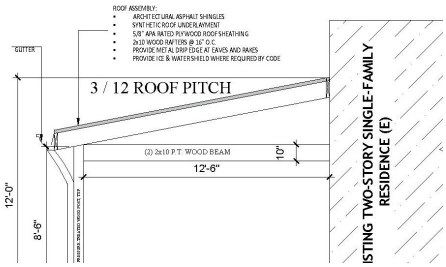

# How the package addressed review needs

## Existing site + placement

The site plan positioned the new porch in relation to the existing residence and property boundaries so reviewers could understand the proposed footprint.

## Structural framing

The drawings documented the primary wood framing members and connection strategy rather than leaving the porch as an architectural sketch only.

## Roof + weather protection

The roof geometry, sheathing, flashing, weatherproofing and related fastening were coordinated with the existing home.

## Existing concrete condition

The record notes that existing concrete condition and anchorage suitability required field verification; an existing patio slab should not automatically be assumed adequate for new structural post loads.

## Professional review

The documented package consisted of seven sheets and was digitally signed and sealed by a Georgia-registered professional engineer.

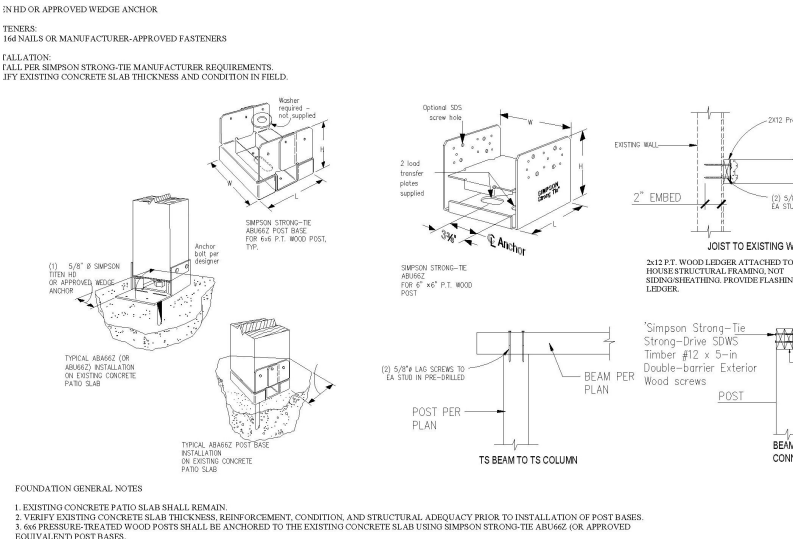

# Documented project status

A seven-sheet digitally signed and sealed drawing package was prepared. Final municipal permit approval and completed construction were not independently established in the available project record, so this case study does not claim either.

## What similar porch projects should verify

- Accurate property placement and setbacks.
- Existing wall / ledger attachment condition.
- Post-base and footing or slab adequacy.
- Roof load path and wind/uplift connections.
- Flashing and weather protection at the house tie-in.
- Whether local review requires licensed professional sealing.


### Planning a similar covered porch?

Send the property address, survey, approximate dimensions, photos, current plans and any building-department comments for a scope review.

siteplans.online/deck-porch-permit-plans/